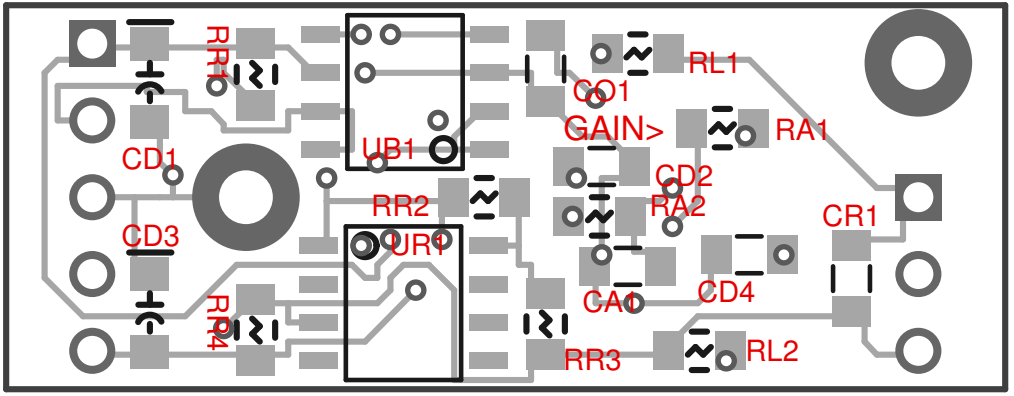
RR1
CD1
CD3
RR4
UB1
RR2
UR1
CO1
GAIN>
RL1
RA1
CD2
RA2
CR1
CA0
CD4
RR3
RL2