Accelnet™ Micro Module

CANopen or Standalone
Brushless or Brush Servoamplifier

- **PCB Mount: 1.6 x 2.5 in**
- **CANopen Distributed Drive**
  - **PVT, Profile, Homing**
  - **Powerful Software Tools**
- **Stand-Alone Operation**
  - **Stepper Inputs: Step/Dir, CU/CD**
  - **Torque/Velocity Control**
    - **PWM Digital**
    - **±10 V Analog**
  - **Electronic gearing**
  - **Indexing**
- **Field-Oriented Control for Optimal Speed / Torque**
- **Auto-Tuning and Auto-Phasing**
- **Feedback**
  - **Digital Encoder and Halls**
  - **Dual encoder operation**
- **Programmable I/O:**
  - **10 inputs, 3 outputs**

NEW!

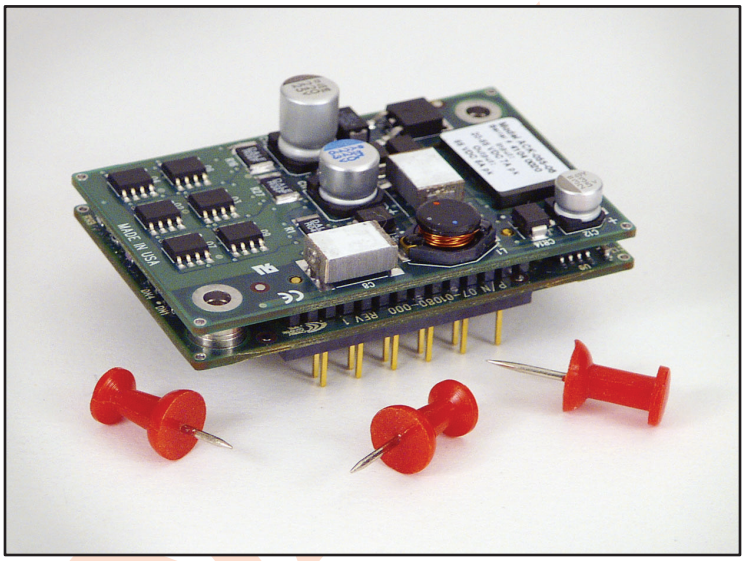

MODEL	Ic	Ip	VDC
ACK-055-06	3	6	55
ACK-090-04	2	4	90

PRELIMINARY

DESCRIPTION

Accelnet™ Micro Module is a digital servoamplifier that combines CANopen networking with 100% digital control of brush or brushless motors in a PC board mounting package with power options to 3 Adc continuous and 6 Adc peak from 20 to 90 Vdc power supplies.

Accelnet™ Micro Module operates as a Motion Control Device using the DSP-402 protocol under the CANopen DS-301 V4.01 (EN 50325-4) application layer. DSP-402 modes supported include Interpolated Position (PVT), Profile Position, Profile Velocity, Profile Torque, and Homing.

There are ten logic inputs. One is dedicated to the Amp Enable function, the other nine are programmable. There are three logic outputs rated to +24 Vdc.

Used as a stand-alone amplifier, *Accelnet™ Micro Module* can operate using incremental position commands from step-motor controllers in Pulse/Direction or CU/CD format, as well as A/B quadrature commands from a master-encoder. Torque or velocity control can be from digital PWM signals, or analog ±10 V.

Amplifier commissioning is facilitated by *CME 2™* software operating under Windows® communicating with *Accelnet™ Micro Module* via an RS-232 link. Auto-tuning algorithms in *CME 2™* slash set up times for fast system commissioning by automating motor phasing, and current-loop tuning. A powerful oscilloscope and waveform generator display amplifier performance for fine tuning. Amplifier configurations are saved in non-volatile flash memory. OEM's can inventory one part, and configure amplifiers on-site to each axis in a machine.

Space-vector modulation delivers higher motor speeds and lower motor power dissipation than conventional sine-PWM modulation. Carrier-cancellation modulation all but eliminates motor ripple current and dissipation at a standstill. Current-loop sampling is at 14 kHz, position and velocity loops at 2.8 kHz and PWM ripple at 28 kHz.

All amplifier circuits are DC coupled and operate from unregulated transformer-isolated linear DC power supplies, or regulated switching power supplies.

The PC-board mounting package is suitable for high-density, multi-axis installations in equipment where space is at a premium, and wiring must be minimized.

ACCELNET™ FEATURES

• CANopen NETWORKING

Based on the CAN physical layer, a robust, two-wire communication bus originally designed for automotive use where low-cost and noise-immunity are essential, CANopen adds support for motion-control devices and command synchronization. The result is a highly effective combination of data-rate and low-cost for multi-axis motion control systems. Device synchronization enables multiple axes to coordinate moves as if they were driven from a single control card.

• FIELD-ORIENTED CONTROL

Unlike conventional sinusoidal commutation which controls only the amplitude of the motor phase currents, Field-Oriented Control (FOC) controls the electrical phase in order to maintain the optimum ±90° between the motor magnetic axis and the field produced by the phase currents. The effect is to maximize the efficiency of the motor, and minimize the heating produced by the drive currents. Torque is maintained over a wider range of speeds than with conventional sinusoidal commutation, and space-vector modulation gives higher motor speeds from the same power supply.

• PC BOARD MOUNTING

The small size, and cooling options enable *Accelnet*™ to be integrated into machinery with fewer cables and connections, and closer to the motor when required. Optional convection heatsinks provide two choices of cooling capacity. The *Accelnet*™ case has tabs molded-in that accept Socket-A compatible chip-coolers which have integral fans to provide even greater cooling capacity.

RS-232 COMMUNICATION

Accelnet™ is configured via a three-wire, full-duplex RS-232 port that operates from 9,600 to 115,200 Baud. *CME 2*™ software provides a graphic user interface (GUI) to set up all of *Accelnet*™ features via a computer serial port.

The RS-232 port is used for amplifier set up and configuration. Once configured, *Accelnet*™ can be used in stand-alone mode taking digital position, velocity, or torque commands from a controller, or as a networked amplifier on a CANopen bus.

CANopen COMMUNICATION

Accelnet™ uses the CAN physical layer signals CANH, CANL, and GND for connection, and CANopen protocol for communication.

Before connecting *Accelnet*™ to the CAN network, it must be assigned a CAN address. This is done via the RS-232 port, which is also used for general amplifier setup. The CAN address is a combination of an internal address stored in flash memory, and digital inputs which have been configured to act as CAN address bits. A maximum of 128 CAN devices are allowed on a CAN bus network, so this limits the input pins used for this purpose to a maximum of seven, leaving three inputs available for other purposes. Most installations will use less than the maximum number of CAN devices, in which case the number of inputs used for a CAN address can be less than seven, leaving more inputs available for other functions.

When inputs are used for the CAN address bits, the internal address is added to the binary value that results from the inputs. If all the inputs are used as logic inputs, then the CAN address in flash memory is the amplifier CAN address.

PRELIMINARY

GENERAL SPECIFICATIONS

Test conditions: Load = Wye connected load: 1 mH+ 1Ω line-line. Ambient temperature = 25 °C. +HV = HV_{max}

MODEL	ACK-055-06	ACK-090-04	
OUTPUT POWER			
Peak Current	6 (4.24)	4 (2.83)	Adc (Arms, sinusoidal)
Peak time	1	1	Sec
Continuous current	3 (2.12)	2 (1.41)	Adc (Arms, sinusoidal)
Peak Output Power	0.99	0.81	kW
Continuous Output Power	0.33	0.27	kW
INPUT POWER			
HV_{min} to HV_{max}	+20 to +55	+20 to +90	Vdc,transformer-isolated
Ipeak	6.6	4.4	Adc (1 sec) peak
Icont	3.3	2.3	Adc continuous
Aux HV	+20 to HV_{max}	2.5 W	Optional keep-alive power input when +HV is removed
PWM OUTPUTS			
Type	MOSFET 3-phase inverter, 14 kHz center-weighted PWM carrier, space-vector modulation		
PWM ripple frequency	28 kHz		
BANDWIDTH			
Current loop, small signal	2.5 kHz typical, bandwidth will vary with tuning & load inductance		
HV Compensation	Changes in HV do not affect bandwidth		
Current loop update rate	14 kHz (71.4 µs)		
Position & Velocity loop update rate	2.8 kHz (357 µs)		
REFERENCE INPUTS			
CANopen bus	Homing, Profile Position, Profile Velocity, Profile Torque and Interpolated Position modes		
Digital position reference	Pls/Dir, CW/CCW	Stepper commands (2 MHz maximum rate)	
	Quad A/B Encoder	2 Mline/sec, (8 Mcount/sec after quadrature)	
Analog torque & velocity reference	±10 Vdc, 5 kΩ differential input impedance		
Digital torque & velocity reference (Note 1)	PWM , Polarity	PWM = 0~100%, Polarity = 1/0	
	PWM	PWM = 50% +/-50%, no polarity signal required	
	PWM frequency range	1 kHz minimum, 100 kHz maximum	
	PWM minimum pulse width	220 ns	
DIGITAL INPUTS (NOTE 1)			
Number	10		
All inputs	74HC14 Schmitt trigger operating from +5 Vdc with RC filter on input, 10 kΩ pull-up to +5 Vdc RC time-constants assume active drive on inputs and do not include 10 kΩ pull-ups.		
Logic levels	Vin-LO < 1.35 Vdc, Vin-HI >3.65 Vdc, Maximum input voltage = +10 Vdc		
Enable [IN1]	1 dedicated input for amplifier enable, active level programmable, 33 µs RC filter		
GP [IN2,3,4,5]	4 General Purpose inputs with 33 µs (22 µs for [IN5]) RC filter, programmable functionst		
HS [IN6,7,8,9,10]	5 High-Speed Inputs inputs with 100 ns RC filter, programmable functions		
DIGITAL OUTPUTS			
Number	3		
Type	Current-sinking MOSFET open-drain output with 1 kΩ pullup to +5 Vdc through diode 100 mAdc sink max, +30 Vdc max		
Functions	Programmable with *CME 2*™		
Active Level	Programmable to either HI (off, pull-up to +5 Vdc) or LO (on, current-sinking) when output is active		
RS-232 COMMUNICATION PORT			
Signals	RxD, TxD, Gnd		
Mode	Full-duplex, serial communication port for amplifier setup and control, 9,600 to 115,200 baud		
Protocol	ASCII or Binary format		
Multi-drop	ASCII interface from single RS-232 port to control multiple amplifiers (Xenus, Accelnet, Stepnet) Amplifier with serial connection acts as master for bi-directional data flow to other amplifiers using CAN connections in daisy-chain from amplifier to amplifier		
CANopen COMMUNICATION PORT			
Signals	CANH, CANL, Gnd. 1Mbit/sec maximum.		
Protocol	CANopen Application Layer DS-301 V4.01		
Device	DSP-402 Device Profile for Drives and Motion Control		
DC POWER OUTPUT			
+5 Vdc	250 mA maximum. Directly connected to amplifier internal circuits. L-C filter required to isolate internal and external circuits		
MOTOR CONNECTIONS			
Motor U,V,W	Amplifier outputs to 3-phase brushless motor, Wye or delta connected For DC brush motor use outputs U & V		
Encoder	Quadrature encoder, differential outputs (A,/A,B,/B,X,/X), 5 Mlines/sec (20 Mcount/sec after quadrature)		
Halls	Hall signals (U,V,W)		
Motemp	Motor temperature sensor or switch		
PROTECTIONS			
HV Overvoltage	+HV > +56, +91 Vdc	Amplifier outputs turn off until +HV is < overvoltage (for 55, 90 Vdc models)	
HV Undervoltage	+HV < +20 Vdc	Amplifier outputs turn off until +HV >= +20 Vdc	
Amplifier over temperature	PC Board > 70 °C.	Programmable as latching or temporary fault	
Short circuits		Output to output, output to ground, internal PWM bridge faults	
I^2T Current limiting		Programmable: continuous current, peak current, peak time	
Latching / Non-Latching		Programmable response to errors	

Notes

1. [IN1] is not programmable and always works as amplifier Enable. Other digital inputs are programmable.

PRELIMINARY

TYPICAL DRIVER CONNECTIONS

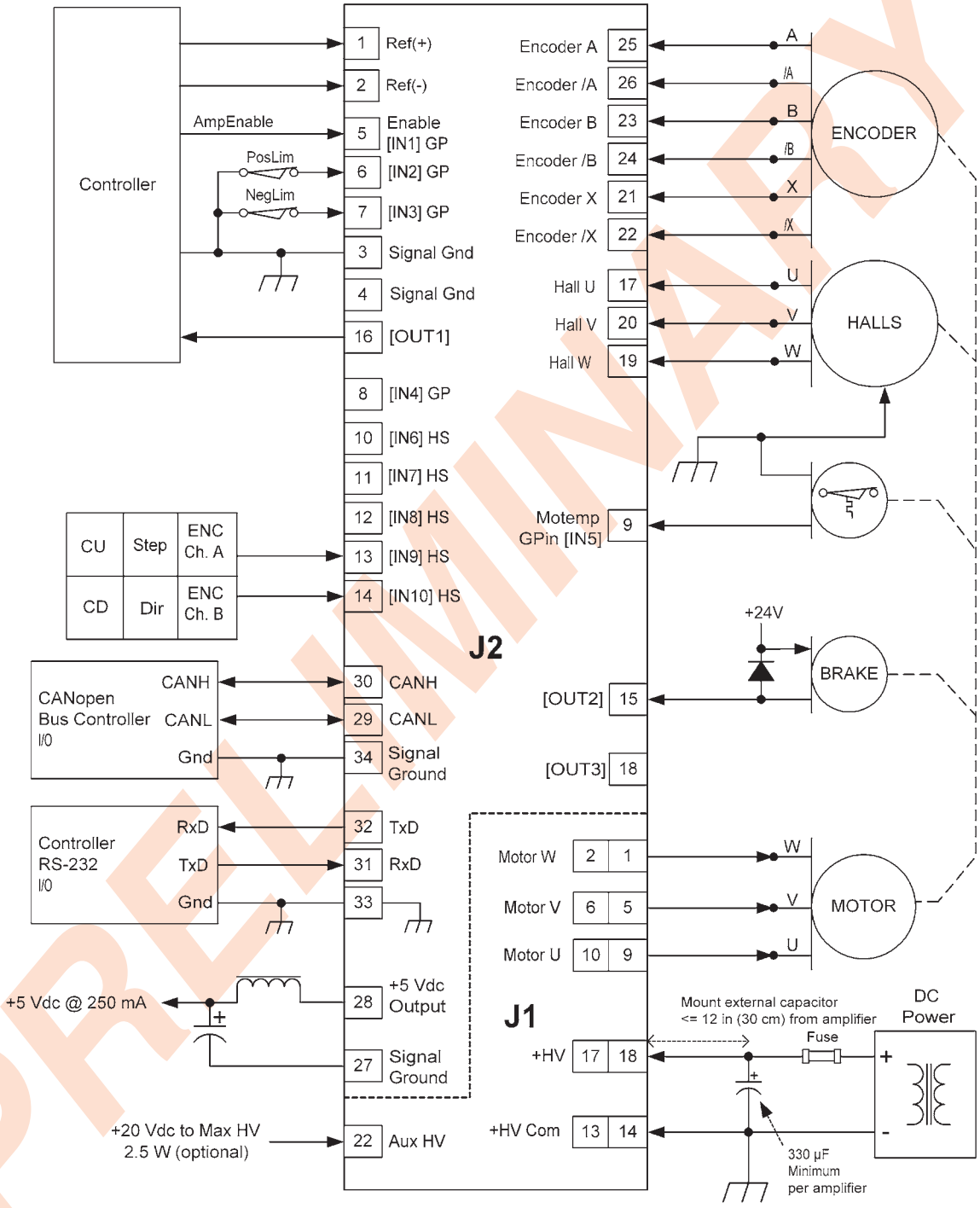

PRELIMINARY

NOTES

1. [IN1] always functions as Drive Enable with programmable active level
   [IN2]~[IN10] have programmable functions and active level
2. HS inputs [IN6,7,8,9,10] are for high-speed signals and have 100 ns RC filters.
   GP inputs [IN1,2,3, & 4] have 33 µs filters, [IN5] has a 22 µs filter.
   RC filter time constants apply when inputs are driven by active sources and do not include the 10 kΩ pull-up resistors.

DIMENSIONS

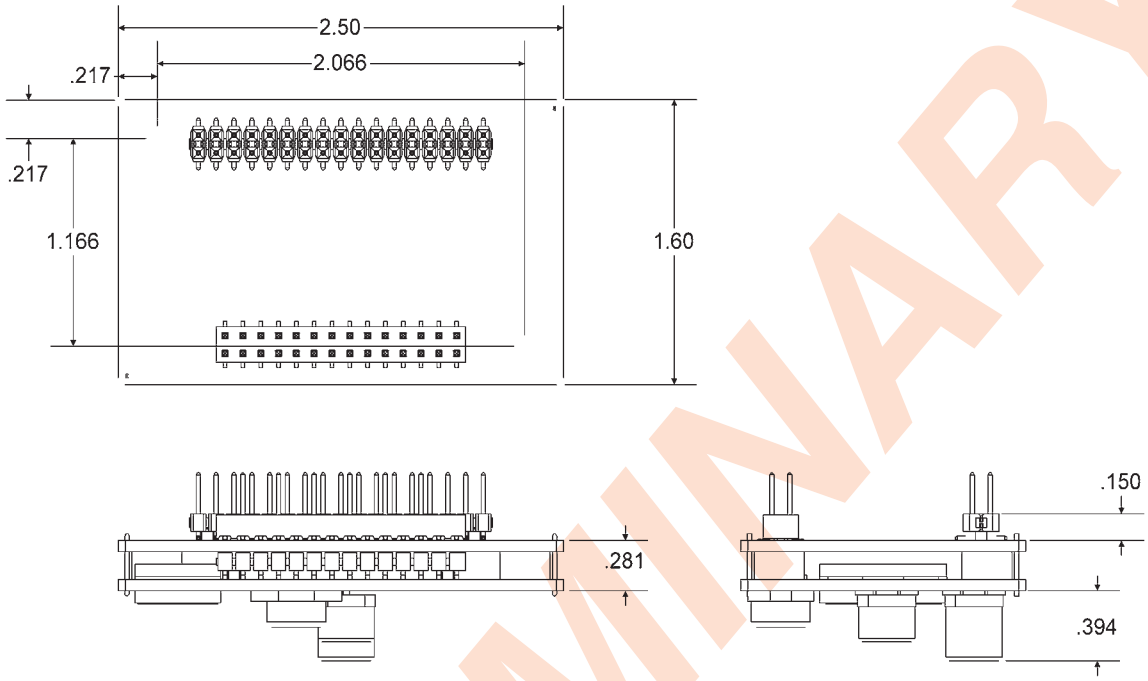

Notes

1. Dimensions shown in inches (mm).

PRELIMINARY

COOLING REQUIREMENTS

From charts below, find power dissipation based on amplifier model, HV, and output current. With ambient temperature known, calculate required thermal resistance. Select cooling method that gives a thermal resistance that is equal to, or lower than the calculated value.

Example:
ACK-055-06, HV = 55 Vdc, Iout = 3A
Power dissipation is 3.9 W
Amplifier thermal shutdown is at 90 °C, ambient is 45 °C
Thermal resistance required = (90 - 45) / 3.9 = 11.5
Convection cooling gives 15 °C/W, so forced-air is required.

Thermal Resistance (°C/W)	
Convection	*15*
Forced Air, 100 LFM	*9*
Forced Air, 200 LFM	*7*

ACK-090-04 Dissipation (W)			
Iout (Adc)	**HV (Vdc)**		
	30	**60**	**90**
0	*2.3*	*2.4*	*2.7*
1	*2.5*	*2.7*	*3.1*
2	*3.0*	*3.3*	*3.7*
3	*3.7*	*4.1*	*4.7*
4	*4.9*	*5.3*	*6.1*

ACK-055-06 Dissipation (W)			
Iout (Adc)	**HV (Vdc)**		
	15	**35**	**55**
0	*2.4*	*2.3*	*2.4*
1	*2.5*	*2.5*	*2.6*
2	*2.9*	*2.9*	*3.1*
3	*3.6*	*3.5*	*3.9*
4	*4.6*	*4.5*	*4.9*
5	*6.0*	*5.7*	*6.2*
6	*7.8*	*7.4*	*7.9*

CME 2™ SOFTWARE

Driver setup is fast and easy using *CME 2™* software. All of the operations needed to configure the driver are accessible through this powerful and intuitive program. Motor data can be saved as .ccm files. Driver data is saved as .ccx files that contain all driver settings plus motor data. This eases system management as files can be cross-referenced to ampifiers. Once an driver configuration has been completed systems can be replicated easily with the same setup and performance.

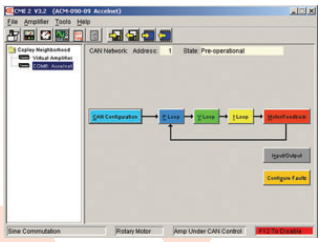

RS-232 COMMUNICATION

Accelnet Micro Module is configured via a three-wire, full-duplex RS-232 port that operates from 9,600 to 115,200 Baud. *CME 2™* software provides a graphic user interface (GUI) to set up all of *Accelnet Micro Module* features via a computer serial port. Once configured, *Accelnet Micro Module* can be used in stand-alone mode, or as a networked driver on a CAN bus.

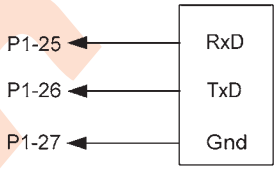

ICL3221
RS-232 Transceiver

CANopen COMMUNICATION

Accelnet Micro Module uses the CAN physical layer signals CANH, CANL, and GND for connection, and CANopen protocol for communication. The electrical interface is a TJA1050 high-speed CAN transceiver.

Before connecting *Accelnet Micro Module* to the CAN network, it must be assigned a CAN address. This can be done via the RS-232 port, or by using logic inputs for the CAN address bits. The CAN address is a combination of an internal address stored in flash memory, and an address derived from the logic inputs. A maximum of 127 CAN devices are allowed on a CAN bus network, so this limits the input pins used for this purpose to a maximum of seven, leaving three inputs available for other purposes. Most installations will use less than the maximum number of CAN devices, in which case the number of inputs used for a CAN address can be less than seven, leaving more inputs available for other functions.

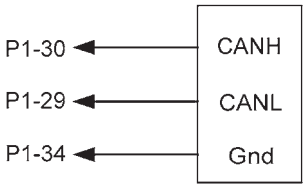

TJA1050
CAN Transceiver

When inputs are used for the CAN address bits, the internal address is added to the binary value that results from the inputs. If all the inputs are used as logic inputs, then the CAN address in flash memory is the driver CAN address.

STAND-ALONE OPERATION

Accelnet Micro Module can operate with external motion controllers in torque, velocity, or position mode.

Torque (current, force) and velocity modes accept command inputs in either analog ±10V format, or as digital PWM & Direction signals.

When operating as a position controller command signal are digital in either Pulse/Direction or CU/CD (Count-UP/Count-Down) format. Quadrature encoder signals can also be used. In all cases, the ratio of input position commands to motor encoder feedback is programmable to match controller position units to actual motor travel. If using an encoder as position input this feature also enables electronic gearing.

DIGITAL TORQUE & VELOCITY INPUTS

The PWM signal duty-cycle controls magnitude, and the DC signal controls polarity.

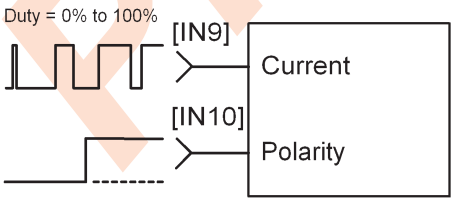

ANALOG TORQUE & VELOCITY INPUTS

A ±10V analog signal controls motor current (torque, force).

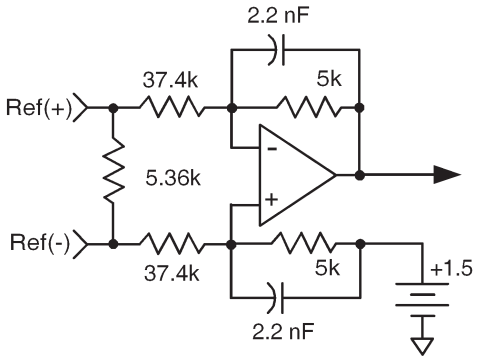

PRELIMINARY

STAND-ALONE MODE POSITION-CONTROL INPUTS

Accelnet Micro Module works with motion controllers that output pulses to command position. These formats are supported:

Step/Direction
CU/CD
A/B Quadrature Encoder

In Step/Direction mode, a pulse-train controls motor position, and the direction is controlled by a DC level at the Direction input. CU/CD (Count-Up/Count-Down) signals command the motor to move CW or CCW depending on which input the pulse-train is directed to.
The motor can also be operated in an electronic gearing mode by connecting the inputs to a quadrature encoder on another motor. In all cases the ratio between input pulses and motor revolutions is programmable.

STEP/DIRECTION INPUTS

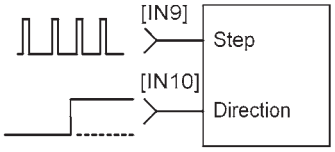

COUNT-UP/COUNT-DOWN INPUTS

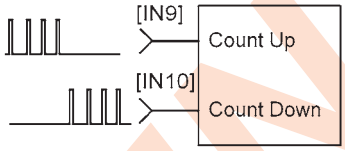

QUAD A/B ENCODER INPUTS

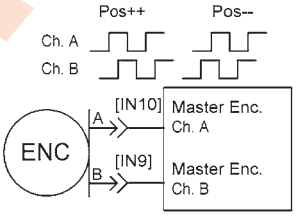

MOTOR CONNECTIONS

Motor connections are of three types: phase, Halls, and encoder. The phase connections carry the amplifier output currents that drive the motor to produce motion. The Hall signals are three digital signals that give absolute position feedback within an electrical commutation cycle. The encoder signals give incremental position feedback and are used for velocity and position modes, as well as sinusoidal commutation.

MOTOR PHASE CONNECTIONS

The driver output is a dual H-bridge that converts the DC buss voltage (+HV) into sinusoidal voltage waveforms that drive the motor phases. Cable should be sized for the continuous current rating of the driver. Motor cabling should use twisted, shielded conductors for CE compliance, and to minimize PWM noise coupling into other circuits.

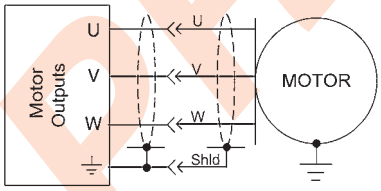

MOTOR TEMPERATURE SENSOR

Digital input [IN5] is programmable for use with a motor overtemperature switch. The input should be programmed as a pull-up to +5 Vdc if the motor switch is grounded.

MOTOR ENCODER

Six dedicated inputs accept the encoder A, B, and X (index) signals. Encoders with differential line-driver outputs must be used.

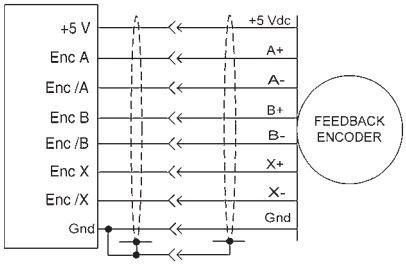

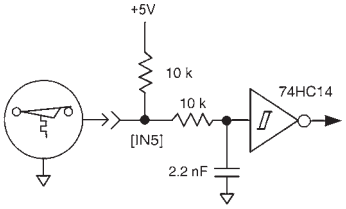

MOTOR BRAKE

Digital outputs [OUT1,2,3] can be programmed to power a motor-mounted brake. These brake the motor when they are in an unpowered state and must have power applied to release. This provides a fail-safe function that prevents motor motion if the system is in an unpowered (uncontrolled) state. Because brakes are inductive loads, an external flyback diode must be used to control the coil voltage when power is removed. The timing of the brake is programmable.

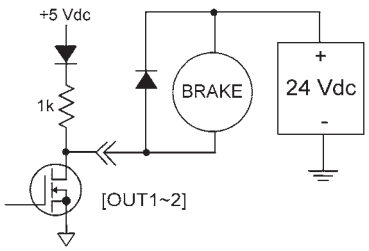

PRELIMINARY

DIGITAL INPUTS

There are ten digital inputs to *Accelnet Micro Module*, nine of which can be programmed to a selection of functions. The Enable input which controls the on/off state of the PWM outputs is fixed to [IN1] as a safety measure so that a driver cannot be programmed in such a way that, once installed, it could not be shut down by the controller. Two types of RC filters are used: GP (General-purpose) and HS (High Speed). The input time-constants apply when driven by active sources (CMOS, TTL, etc). All inputs have 10 kΩ pull-up resistors to +5 Vdc. Input functions such as Step/Direction, CountUp/CountDown, Quad A/B must be wired to inputs having the HS filters, and inputs with the GP filters can be used for general purpose logic functions, limit switches, and the motor temperature sensor. In addition to the selection of functions, the active level for each input is individually programmable.

GP input functions

- Drive enable
- CAN address
- Positive Limit switch
- Negative Limit switch
- Home switch
- Driver Reset
- Motor temperature sensor input
- Motion abort

HS input functions

- Step/Direction, or CountUp/CountDown step motor control commands
- Quad A/B master encoder position commands
- Motor-mounted feedback encoder

Driver reset is programmable to take place on transitions of the input and is programmable to 1/0 or 0/1. The motor temp sensor function will disable the driver if a switch in the motor opens or closes when the motor overheats.

GP INPUTS 1,2,3,4,5

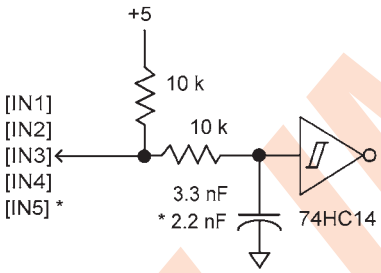

HS INPUTS 6,7,8,9,10

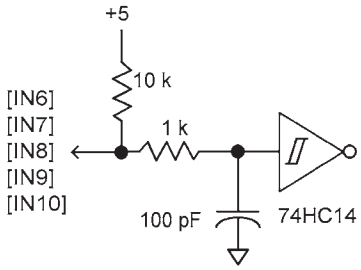

DIGITAL OUTPUTS

Digital outputs [OUT1~2] are open-drain MOSFETs with 1 kΩ pull-up resistors in series with a diode to +5 Vdc. They can sink up to 100 mAdc from external loads operating from power supplies to +30 Vdc. The outputs are typically configured as drive fault and motor brake. Additional functions are programmable. As a drive fault output, the active level is programmable to be HI or LO when a fault occurs. As a brake output, it is programmable to be either HI or LO to release a motor brake when the drive is enabled. When driving inductive loads such as a relay, an external fly-back diode is required. A diode in the output is for driving PLC inputs that are opto-isolated and connected to +24 Vdc. The diode prevents conduction from +24 Vdc through the 1 kΩ resistor to +5 Vdc in the drive. This could turn the PLC input on, giving a false indication of the drive output state.

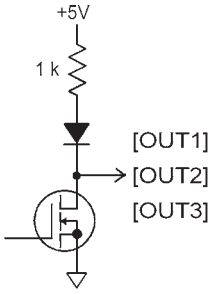

+5 VDC OUTPUT

The amplifier internal +5 Vdc power is made available at J1-20. The output current is 250 mA maximum. This power should be used with care as there is no linear regulator between the amplifier internal power supply and the external circuits as in other Copley amplifiers with +5 Vdc outputs. When using this power an L-C filter is required. This consists typically of a ferrite-core inductor and an electrolytic capacitor. A typical value for the capacitor would be 4.7 µF. The inductor can be 50~150 µH and should be rated for DC current of 30 mA minimum. The capacitor should have a return path to amplifier power ground (J1-17, 18).

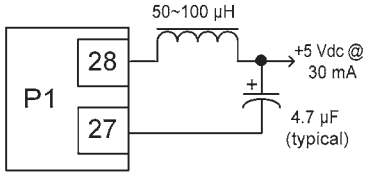

PRELIMINARY

POWER SUPPLIES

Accelnet Micro Module operates typically from transformer-isolated, unregulated DC power supplies. These should be sized such that the maximum output voltage under high-line and no-load conditions does not exceed the drivers maximum voltage rating. Power supply rating depends on the power delivered to the load by the driver.

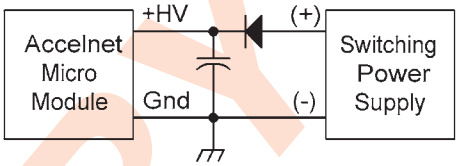

Operation from regulated switching power supplies is possible if a diode is placed between the power supply and driver to prevent regenerative energy from reaching the output of the supply. If this is done, there must be external capacitance between the diode and driver. The minimum value required is 330 µF per driver mounted no more than 12 inches from the driver.

AUX HV (Optional)

CANopen communications can be maintained when +HV is turned off by using the Aux HV input. The voltage has the same range as +HV, and can be greater or less than +HV.

In operation, the Aux HV keeps the driver logic and control circuits active so it is always visible as a node on a CAN bus. The current-position data is maintained making 'homing' unnecessary after system power is re-enabled. If *Accelnet Micro Module* is operating as a stand-alone driver, Aux HV is not necessary but can be useful if the controller is monitoring driver digital outputs.

GROUNDING CONSIDERATIONS

Power and control circuits share a common circuit-ground (P1-3,4,27,33, 34, and J1-13, 14). Input logic circuits are referenced to Signal Ground, as are power GND, digital outputs, and encoder. For this reason, driver Gnd terminals should connect to the users' common ground system so that signals between driver and controller are at the same common potential, and to minimize noise. The system ground should, in turn, connect to an earthing conductor at some point so that the whole system is referenced to "earth".

Because current flow through conductors produces voltage-drops across them, it is best to connect the driver HV GND to system earth, or circuit-common through the shortest path, and to leave the power-supply floating. In this way, the power supply (-) terminal connects to ground at the driver HV Return terminals, but the voltage drops across the cables will not appear at the driver ground, but at the power supply negative terminal where they will have less effect.

For CE compliance driver cables should be shielded. Motor phase currents are balanced, but currents can flow between the PWM outputs, and the motor cable shield.

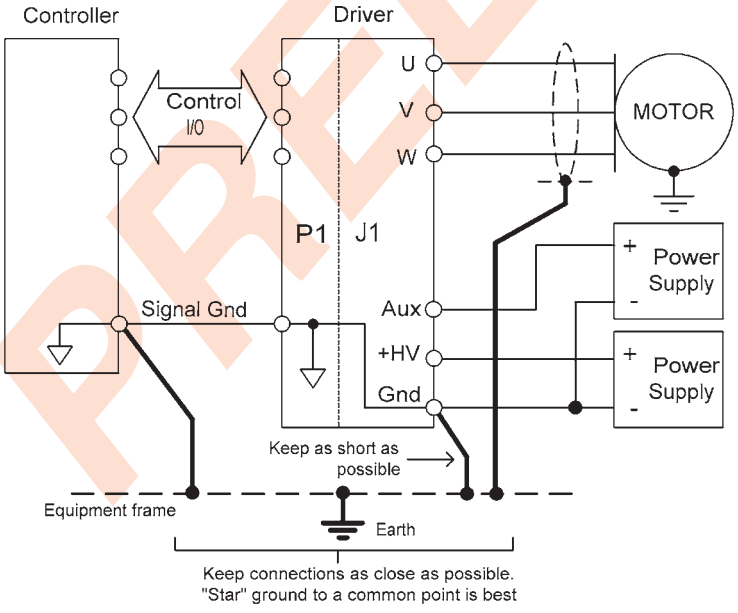

Signals from controller to driver are referenced to +5 Vdc, and other power supplies in user equipment. These power supplies should also connect to system ground and earth at some point so that they are at same potential as the driver circuits. The final configuration should embody three current-carrying loops. First, the power supply currents flowing into and out of the driver at the +HV and Gnd pins on J1. Second the driver outputs driving currents into and out of the motor phases, and motor shield currents circulating between the U, V, and W outputs and HV common. And, lastly, logic and signal currents connected to the driver control inputs and outputs.For CE compliance driver cables should be shielded. Motor phase currents are balanced, but currents can flow between the PWM outputs, and the motor cable shield.

Signals from controller to driver are referenced to +5 Vdc, and other power supplies in user equipment. These power supplies should also connect to system ground and earth at some point so that they are at same potential as the driver circuits. The final configuration should embody three current-carrying loops. First, the power supply currents flowing into and out of the driver at the +HV and Gnd pins on J1. Second the driver outputs driving currents into and out of the motor phases, and motor shield currents circulating between the U, V, and W outputs and HV common. And, lastly, logic and signal currents connected to the driver control inputs and outputs.

PRELIMINARY

DRIVER PC BOARD CONNECTORS

Top View

Driver viewed from above looking down on the pc board on which it is mounted.
Pins shown in grey are unused locations in PC board socket

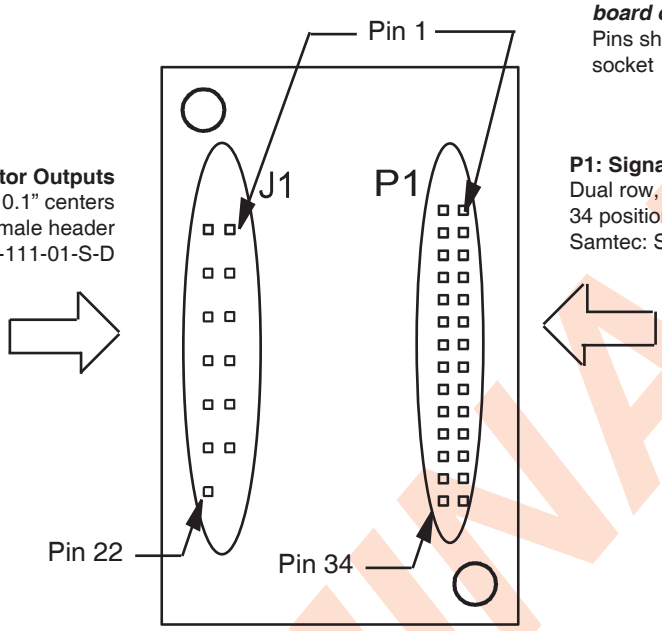

J1: +HV, Gnd, & Motor Outputs
Dual row, 0.1" centers
22 position female header
Samtec: SSW-111-01-S-D

P1: Signal
Dual row, 0.1" centers
34 position female header
Samtec: SSW-117-01-S-D

Signal	J1 Pin		Signal
Motor W	2	1	Motor W
	4	3	
Motor V	6	5	Motor V
	8	7	
Motor U	10	9	Motor U
	12	11	
HV common	14	13	HV common
	16	15	
+HV	18	17	+HV
	20	19	
+HV Aux	22	21	

SIGNALS	P1 Pin		SIGNALS
Ref (-)	2	1	Ref (+)
Signal ground	4	3	Signal ground
[IN2]	6	5	[IN1]
[IN4]	8	7	[IN3]
[IN6]	10	9	[IN5]
[IN8]	12	11	[IN7]
[IN10]	14	13	[IN9]
[OUT1]	16	15	[OUT2]
[OUT3]	18	17	Hall U
Hall V	20	19	Hall W
Encoder /X	22	21	Encoder X
Encoder /B	24	23	Encoder B
Encoder /A	26	25	Encoder A
+5 Vdc @ 250 mA	28	27	Signal Ground
CANH	30	29	CANL
TxD	32	31	RxD
Signal ground	34	33	Signal Ground

PRELIMINARY

NOTES

1. Grey-shaded signal are N.C. (No Connection)
2. Signals are grouped for current-sharing on the power connector. When laying out pc board art-works, all pins in groups having the same signal name must be connected.
3. Do not connect to this pin. Function is reserved.

PC BOARD MOUNTING FOOTPRINT

Top View
Dimensions in inches (mm)

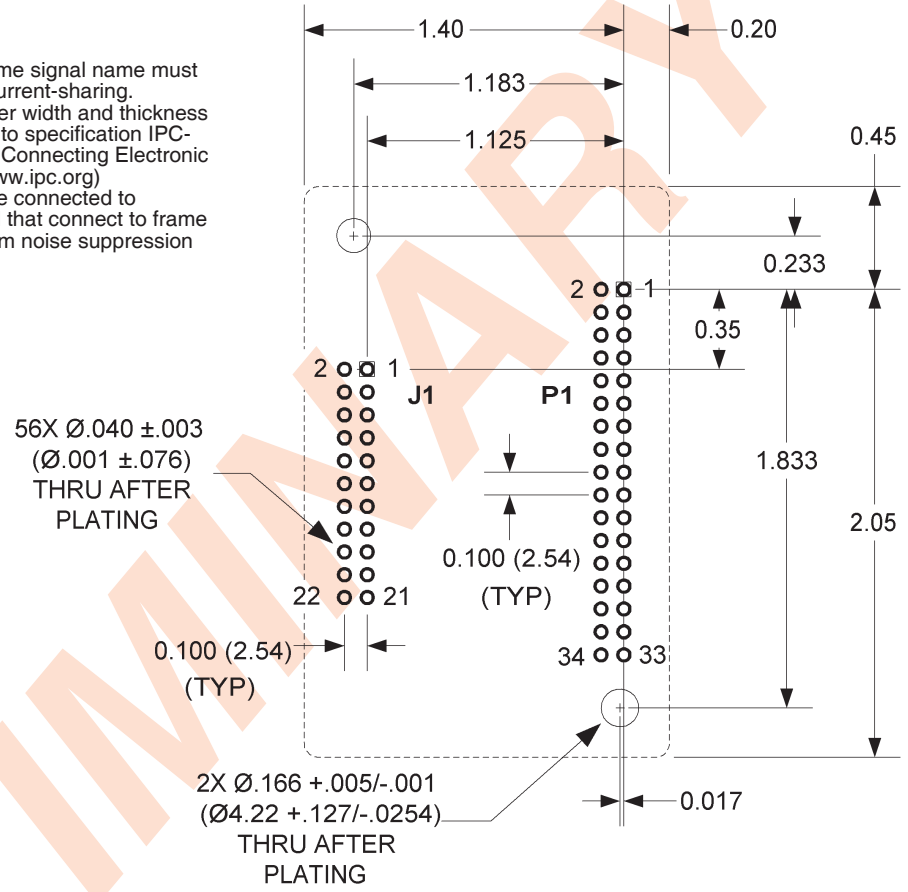

NOTES

1. J1 pins with the same signal name must be connected for current-sharing.
2. To determine copper width and thickness for J1 signals refer to specification IPC-2221. (Association Connecting Electronic Industries, http://www.ipc.org)
3. Standoffs should be connected to etches on pc board that connect to frame ground for maximum noise suppression and immunity.

MOUNTING AND COOLING

Accelnet Micro Module mounts on PC boards using two, dual-row, 0.1" female headers. These permit easy installation and removal of the driver without soldering. Threaded standoffs swaged into the PC board provide positive retention of the driver and permit mounting in any orientation. Cooling is by convection, or external fan-supplied forced air.

PC BOARD DESIGN

The peak voltage between adjacent traces will be equal to +HV. Trace width and copper plating thickness should support the driver peak and continuous output current ratings.

Printed circuit board layouts for *Accelnet Micro Module* drivers should follow some simple rules:

1. Install a low-ESR electrolytic capacitor not more than 12 inches from the driver. PWM drivers produce ripple currents in their DC supply conductors. *Accelnet Micro Module* drivers do not use internal electrolytic capacitors as these can be easily supplied by the printed circuit board. In order to provide a good, low-impedance path for these currents a low-ESR capacitor should be mounted as close to the driver as possible. 330 µF is a minimum value, with a voltage rating appropriate to the driver model and power supply.

2. Connect J1 signals (U, V, & W outputs, +HV, and +HV Common) in pin-groups for current-sharing. The signals on J1 are all higher-current types. To carry these currents (up to 6 Adc peak) the pins of J1 must be used in multiples to divide the current and keep the current carrying capacity of the connectors within specification. The diagram on page 9 shows the pin groups that must be inter-connected to act as a single connection point for pc board traces.

3. Follow IPC-2221 rules for conductor thickness and width of J1 signals.

Minimum trace width, and copper plating thickness should follow industry-standards (IPC-2221). The width and plating should depend on the model of driver used, the maximum voltage, and maximum current expected to be used for that model. Power supply traces (+HV, +HV Common) should be routed close to each other to minimize the area of the loop enclosed by the driver DC power. Noise emission or effects on nearby circuitry are proportional to the area of this loop, so minimizing it is good layout practice. Motor signals should also be routed close together. Phase outputs (U, V, & W) should be routed as closely as possible to form a balanced transmission path. Keeping these traces as closely placed as possible will again minimize noise radiation due to motor phase currents. *Accelnet Micro Module* circuit grounds are electrically common, and connect internally. However, the J1 signals carry high currents while the grounds on P1 (signal ground) carry low currents. So, P1 signals should be routed away from, and never parallel to the signals on J1.

Mounting Hardware:

Qty	Description	Mfgr	Part Number	Remarks
1	Socket Strip	Samtec	SSW-111-01-S-D	J1
1	Socket Strip	Samtec	SSW-117-01-S-D	P1
2	Standoff 4-40 X 3/8"	PEM	KFE-440-12-ET	

PRELIMINARY

DESCRIPTION

The Development Kit provides mounting and connectivity for a *Accelnet Micro Module* amplifier. Solderless jumpers ease configuration of inputs and outputs to support their programmable functions. Switches can be jumpered to connect to digital inputs 1~5 so that these can be toggled to simulate equipment operation. Two LED's provide status indication for the digital outputs. To simplify cabling to external controllers, the encoder signals from the motor are connected to pins on the signal connector J3. Dual CAN bus connectors make daisy-chain connections possible so that other CANopen devices such as Copley's *Stepnet* or *Xenus* amplifiers can easily be connected to build mixed stepper and servo multi-axis systems.

RS-232 CONNECTION

The RS-232 port is used to configure the amplifier for stand-alone applications, or for configuration before it is installed into a CANopen network. CME 2™ software communicates with the amplifier over this link and is then used for complete amplifier setup. The CAN address that is set by the rotary switch can be monitored, and an address offset programmed as well. This will add to the switch address to produce a working CAN address that can be from 1 to 127.

The RS-232 connector, J4, is a modular type that uses a 6-position plug, four wires of which are used for RS-232. A connector kit is available (SER-CK) that includes the modular cable, and an adaptor to interface this cable with a 9-pin RS-232 port on a computer.

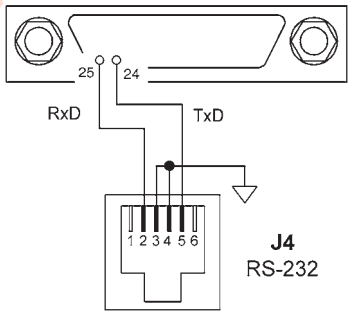

CAN CONNECTIONS

Connectors J6 & J7 are Sub-D male and female 9-position types that conform to the CAN DS-102 Physical Layer specification. The male-female configuration supports a single cable type with male and female connectors that can be daisy-chained from device to device along a CANopen network.

Only the CAN_H, CAN_L, and CAN_GND signals are used. The CAN_GND is connected to the circuit ground on the development kit. This ground is also shared by the amplifier power supply, accessory +5V (for encoders), and the RS-232 link. Other DS-102 signals are wired-through for use by products that support them.

The table below lists the signals and pins on J6 & J7. Signals in ( ) are those that have no connection on the development kit and which are connected pin-to-pin between J6 & J7.

CAN Bus Connector Signals

* These signals connect through from J6 to J7 with no connection to Development Kit PC board.

	PIN	SIGNALS
*	1	(Reserved)
	2	CAN_L
	3	CAN_GND
*	4	(Reserved)
*	5	(CAN_SHLD)
	6	Signal ground
	7	CAN_H
*	8	(Reserved)
*	9	(Reserved)

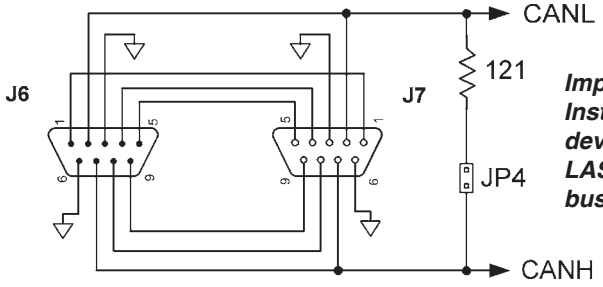

Important! Install JP4 ONLY if development kit is the LAST node on a CAN bus

PRELIMINARY

CAN ADDRESS SELECTION

Rotary switch SW7, labeled “CAN ADDR” connects to IN7, IN8, IN9, and IN10 of the amplifier. These are programmable inputs which default to CAN address bits. The switch will select CAN addresses 0x01~0x0F (dec 1~15) . Address 0 is reserved for network management devices. The CAN standard permits up to 127 devices, so if the amplifier must have a address beyond 0x0F(dec 15), this is done by programming an address offset into the amplifier before it is installed into a CAN environment or by programming logic inputs as CAN

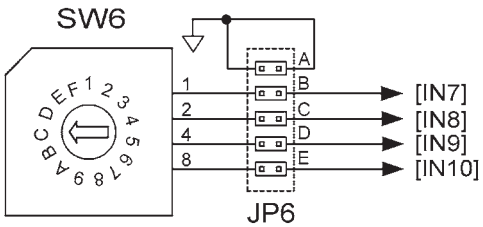

Note: To use inputs 7,8,9, or 10 as logic inputs remove jumpers shown at left to disconnect SW6 from logic inputs.

LOGIC INPUTS

There are has 10 logic inputs. [IN1] is dedicated to the amplifier enable function, the other inputs are programmable.

The development kit is equipped with switches that can be used to control logic inputs 1~5. To use these switches jumpers JP2-A,B,C,D, and E must be installed.

If connecting these logic inputs to external equipment, the same jumpers must be removed so that the switches cannot short input signals to ground.

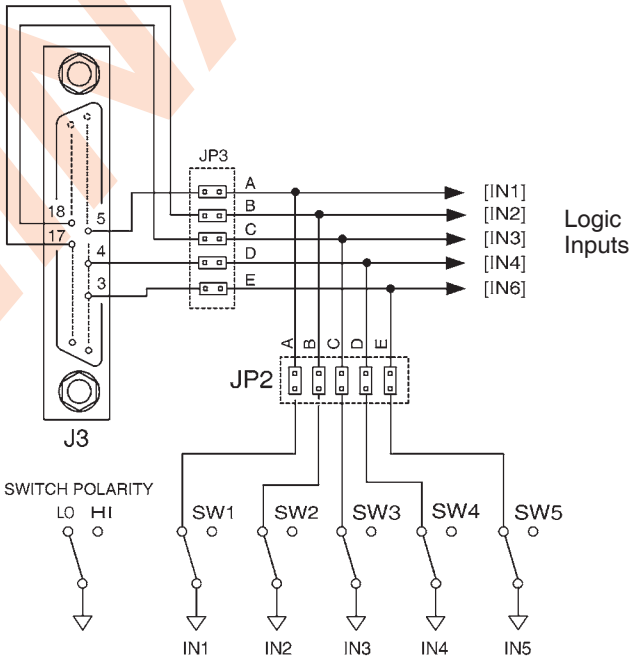

LOGIC OUTPUTS

There are two logic outputs that can drive controller logic inputs or relays. If relays are driven, then flyback diodes must be connected across their terminals to clamp overvoltages that occur when the inductance of the relay coil is suddenly turned off.

As delivered, these outputs drive two LED’s. Jumpers JP1-D, & E connect these LED’s to logic outputs. These are N-channel MOSFET’s which sink current from loads connected to positive voltages. When the outputs are ON (Active Low), they ground the cathode of the led’s which then turn on as they are connected to the +5Vdc supply via current-limiting resistors.

The logic outputs also connect to signal connector J3. If they are used to drive external loads >+5Vdc, the LED jumpers must be removed.

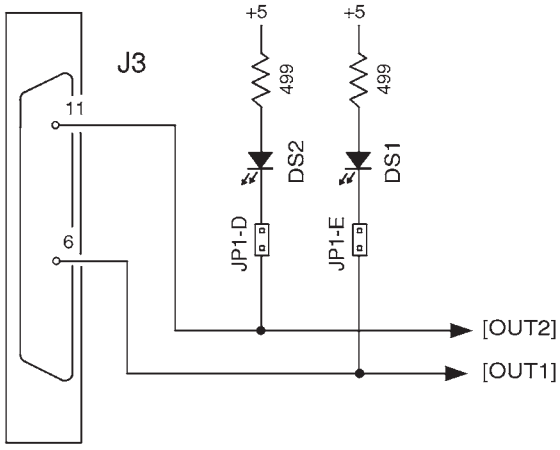

PRELIMINARY

ENCODER CONNECTIONS

The development kit has a 26C32 differential line receiver for the motor encoder inputs. Differential-output encoders are preferred for best signal quality and noise rejection. Wiring should be twisted-pairs, preferably with a shield for each pair. To eliminate noise on the encoder signals caused by reflections on the cables, it is good practice to terminate signal-pairs with a resistor that matches the characteristic impedance of the cable. On the development kit, 121Ω resistors are provided for this purpose. Jumpers at JP9-A, B, and C connect these termination resistors across the differential signals when installed.

If single-ended encoders are used, they must have active (not open-collector) outputs. They should be connected to the A, B, and X pins leaving the /A, /B, and /X pins open. Jumpers at JP9-A, B, and C must be removed.

Note that [IN6] is also connected to switch SW-6. If the encoder index (X, /X) signal is used then jumper JP2-E must be removed so that SW-6 cannot ground the encoder signal from the 26C32.

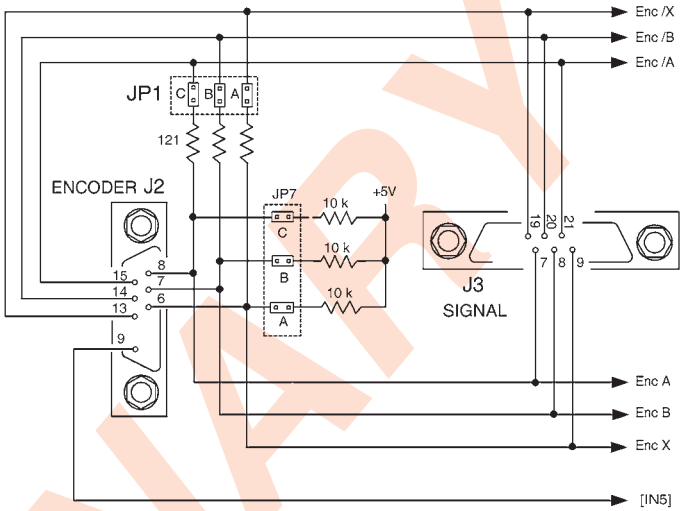

POWER SUPPLIES

+HV

Amplifier main power, +HV, is typically supplied by unregulated DC power supplies. These must be isolated from the mains, and all circuits should be grounded to earth at some point. The +HV supply connects to J1. For good wiring practice, the +HV wires should be twisted together for noise suppression, and the power supply should not be grounded. Doing this ensures that the higher currents flowing in these conductors will not flow through any circuit grounds where they might induce noise.

During deceleration, mechanical energy in the motor and load is converted back into electrical energy that must be dissipated as the motor comes to a stop. While some of this is converted to heat in the motor windings, the rest of it will flow through the amplifier into the power supply. An external storage capacitor should be used if the load has appreciable inertia, and this should be sized such that adding the undissipated energy from the motor will not raise the voltage beyond the point at which the amplifier shuts down. When this is not possible, an external 'dumper', or regenerative energy dissipater must be used which acts as a shunt regulator across the +HV and Gnd terminals.

SWITCHING POWER SUPPLIES

Switching power supplies can also be used for +HV power. Unlike unregulated supplies, these cannot accept reverse energy flow, so an isolating diode must be placed between the power supply and J1-1 to block current flow back into the power supply. When this is done, an external storage capacitor must be used across J1-1 & J1-2 because the capacitor on the Development Kit board is only for ripple-current control, and cannot store enough energy to handle regeneration.

ENCODER +5 VDC

Encoder power must be supplied from an external +5 Vdc supply with sufficient current to drive the motor encoder. Typically these will be 250 mA or less. In cases where an encoder uses a separate interpolater module to process the data, current demand may be higher. Consult the motor encoder literature to be sure that the +5 Vdc supply can handle the encoder power requirements.

AUX HV

Not required for stand-alone operation, an Aux HV power supply provides power for the drive control circuits so that CAN bus communications with the drive can be maintained when the +HV supply is turned off. This might occur as a result of an Emergency Off condition, or for machine operator intervention. The Aux HV supply does not power the PWM stage that drives the motor, but keeps the drive controller enabled as well as inputs and outputs. The Aux HV supply must be less than the +HV supply voltage and greater than the drive minimum +HV (> 20 Vdc).

GROUNDING

An earthing ground connection can be made via a second conductor to J1-2 that connects to the equipment frame ground.

PRELIMINARY

DEVELOPMENT KIT CONNECTIONS

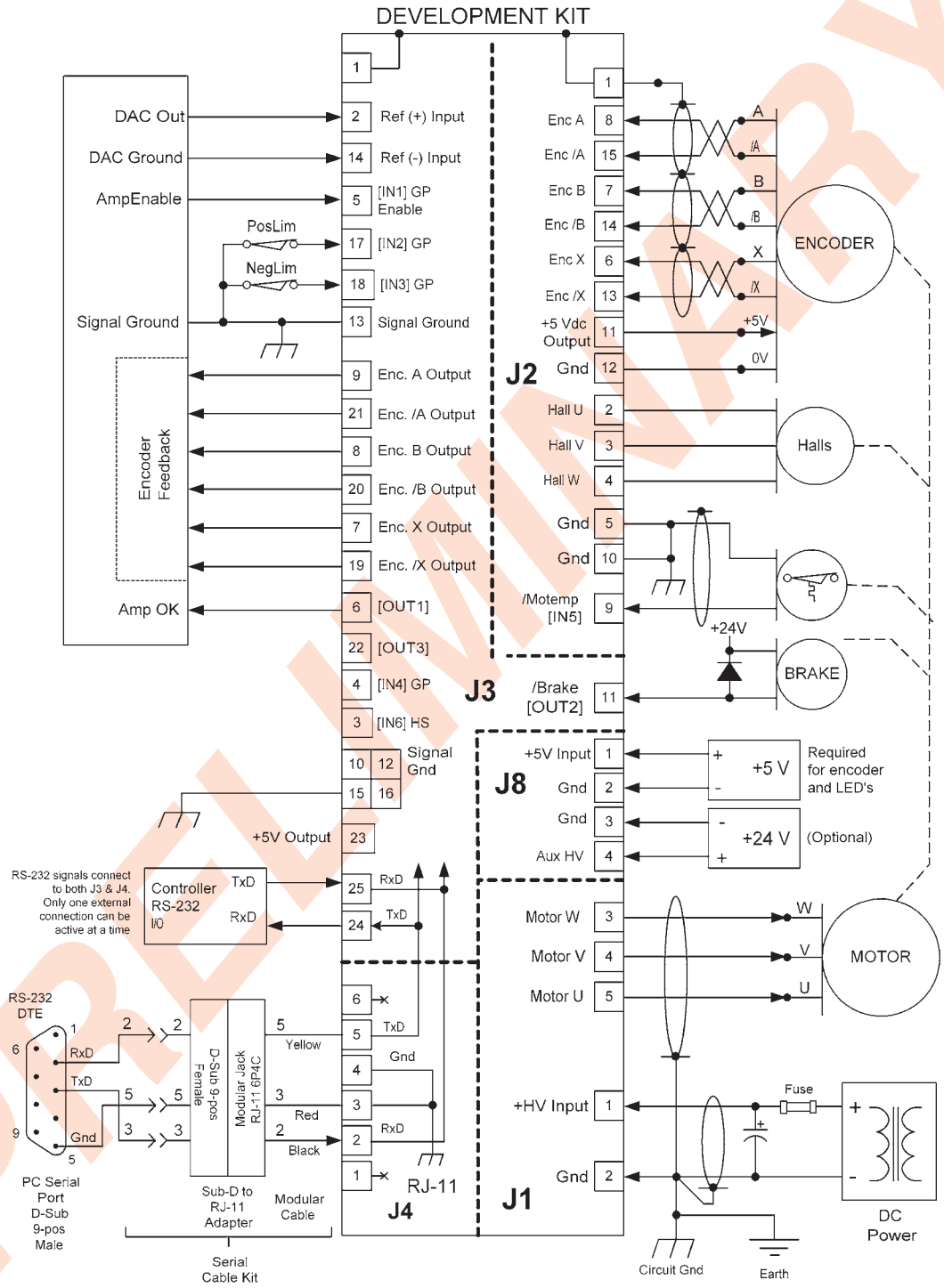

PRELIMINARY

Notes:
1. CAN connectors J6 & J7 are not shown here. For details see pp. 3,6, & 10.

CANopen SIGNALS	PIN
(Reserved)	1
CAN_L	2
CAN_GND	3
(Reserved)	4
(CAN_SHLD)	5

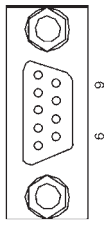

J7

J8 SIGNALS	PIN
+5V Input	1
Gnd	2
Gnd	3
Aux HV Input	4

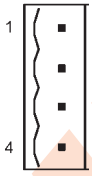

J8

J1 SIGNALS	PIN
+HV Input	1
GND	2
Motor W Output	3
Motor V Output	4
Motor U Output	5

J1

J2

J2 SIGNALS	PIN
Encoder /A Input	15
Encoder /B Input	14
Encoder /X Input	13
Signal Ground	12
+5V Output	11
Signal Ground	10
[IN5]	9

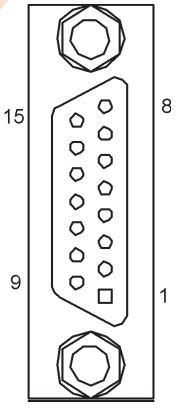

PIN	J2 SIGNALS
8	Encoder A Input
7	Encoder B Input
6	Encoder X Input
5	Signal Ground
4	Hall W
3	Hall V
2	Hall U
1	Chassis Ground

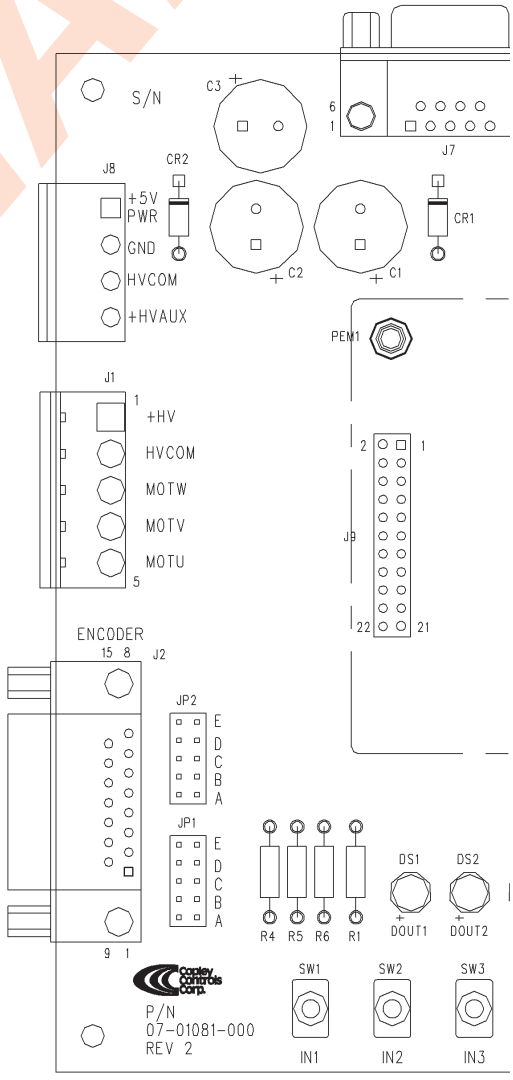

PRELIMINARY

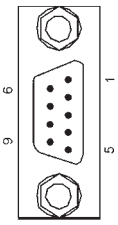

PIN	CANopen SIGNALS
6	CAN_GND
7	CAN_H
8	(Reserved)
9	(CAN_V+)

J6

CANopen Notes:

1. Connector pinouts for J6 & J7 follow CAN standard DS-102.
2. Signals in ( ) are wired-through from J7 to J6 and have no other connections on the pc board.
3. CAN_GND is connected to Gnd on pc board (Stepnet signal and power ground)

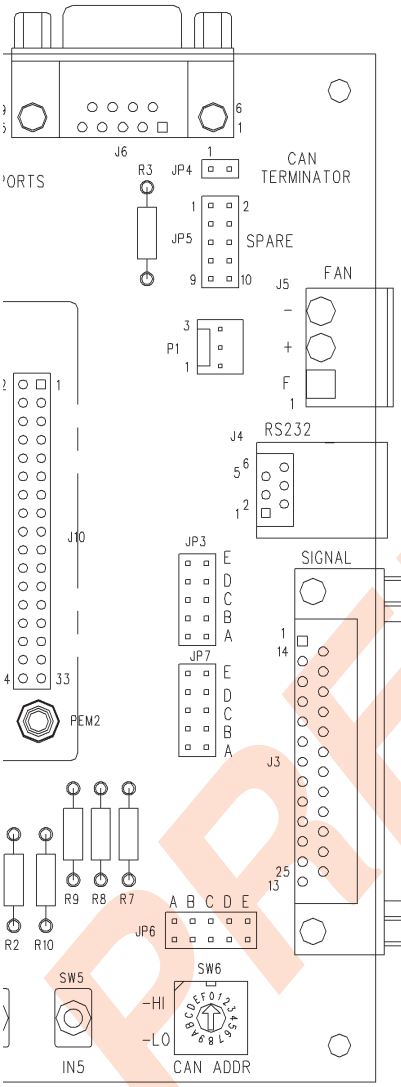

J5

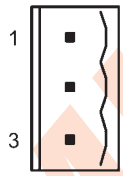

PIN	J5 SIGNALS
1	P1-1
2	P1-2
3	P1-3

J4

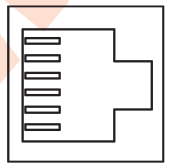

PIN	J4 SIGNALS
6	No Connection
5	TxD Output
4	Signal Ground
3	Signal Ground
2	RxD Input
1	No Connection

J3

J3 SIGNALS	PIN
Chassis Ground	1
Analog Ref(+)	2
GP Input [IN6]	3
GP Input [IN4]	4
Enable Input [IN1]	5
Output [OUT1]	6
Encoder output X	7
Encoder output B	8
Encoder output A	9
Signal Ground	10
Output [OUT2]	11
Signal Ground	12
Signal Ground	13

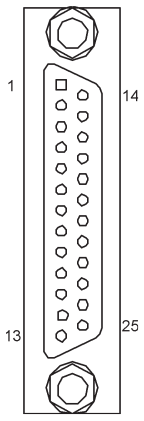

PIN	J3 SIGNALS
14	Analog Ref (-)
15	Signal Ground
16	Signal Ground
17	[IN2] POS Limit Switch
18	[IN3] NEG Limit Switch
19	Encoder /X output
20	Encoder /B output
21	Encoder /A output
22	Signal Ground
23	+5V Output
24	RS-232 TxD Output
25	RS-232 RxD Input

PRELIMINARY

APPLICATIONS

Simplify product design by mounting multiple amplifiers on a single PC board and controlling all of them with a single CAN bus connection to the system controller

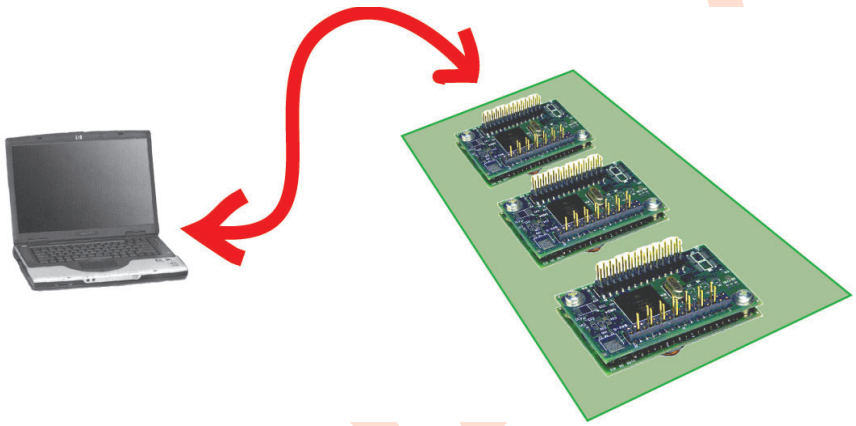

Use as a stand-alone servoamplifier with an external motion controller

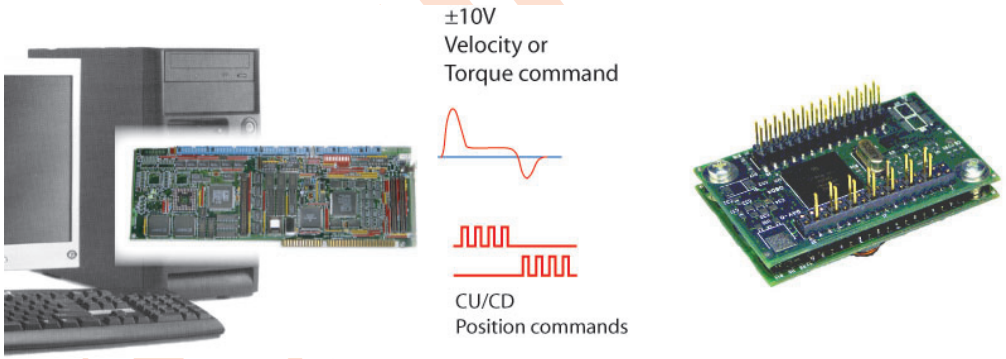

ORDERING GUIDE

PART NUMBER	DESCRIPTION
ACK-055-06	*Accelnet Micro Module* servoamplifier 3/6 Adc @ 55 Vdc
ACK-090-04	*Accelnet Micro Module* Stepper Driver 2/4 Adc @ 90 Vdc
KDK-090-01	*Accelnet Micro Module* Development Kit
KDK-CK	*Accelnet Micro Module* Development Kit Connector Kit
SER-CK	Serial Cable Kit (1 per computer)
CME2	CME 2™ CD (CME 2 program, manual in PDF file format)

ORDERING INSTRUCTIONS

Example: Order 1 ACK-055-06 amplifier with Development Kit, Development Kit Connector Kit, Serial Cable Kit, and CME 2.

Qty	Item	Remarks
1	ACK-055-06	*Accelnet Micro Module* driver
1	KDK-090-01	*Accelnet Micro Module Development Kit*
1	KDK-CK	Connector Kit for Development Kit
1	SER-CK	Serial Cable Kit
1	CME2	*CME 2* CD

PRELIMINARY